TREAT Real-Time Fuel Motion Monitoring System (FMMS)

INL-MIS-17-41845
Approved for public release.
Distribution is unlimited.

David Chichester, James Johnson, Scott Watson, Jay Hix, Sam Bays, and Scott Thompson

Background

A key instrument supporting transient fuel testing at INL's Transient Reactor Facility (TREAT) is the Fuel Motion Monitoring System (FMMS), or 'hodoscope'. The FMMS is capable of measuring the motion of fissionable material in a test capsule as the fuel fails under simulated accident-like conditions. The FMMS uses a large steel collimator to form 360 slots, thity-six rows with ten slots per row, that view the center of the core, covering an area 66-mm wide and 1242-mm tall. During a transient neutrons from the reactor induce fission within the fissionable materials in the test capsule. Fast neutrons from these fission events stream along the viewing slots to fast-neutron detectors located outside the core, roughly 5 m from the center of the core. These neutron-detection events are recorded in 1-ms time steps, and permit a pixelated image of the fuel's location throughout the experiment.

The FMMS' components, including detectors, data acquisition system, and electromechanical systems are 30-40 years old, and haven't been used since the mid-1990s. They are all in need of repair, refurbishment, or replacement to support the TREAT restart program and future transient fuel testing. To address this problem a comprehensive project is underway to restore the FMMS to operation, to recreate the former system's operational capabilities in the near term, with a longer-term goal of expanding on and improving our ability for real-time fuel monitoring.

Return to Operation

In 2017 our work is primarily focused on establishing a limited-viewing capability of 96-channels, in parallel with the reactor restart program. Our goal is to be ready to support single-pin fuel tests in 2018 associated with the Accident Tolerant Fuel (ATF) transient research testing program. Key tasks involved in this activity include:

- inspection, repair/replacement, and qualification of proton recoil scintillator (PRSs);
- inspection, repair/replacement, and qualification of the photomultiplier tubes (PMTs);
- assembly and qualification of PRS detector assemblies;
- design, assembly, and qualification of the data acquisition system, and
- development and qualification of control system software.

Technical Significance

The TREAT reactor has performed 6,604 reactor startups and 2,884 transient irradiations since it was built in 1959. The FMMS played a critical role in support of data interpretation and fuel-failure phenomena identification for most of these trials. The new FMMS will be ready to serve INL's Transient Testing Program for shot 2,885 and beyond.

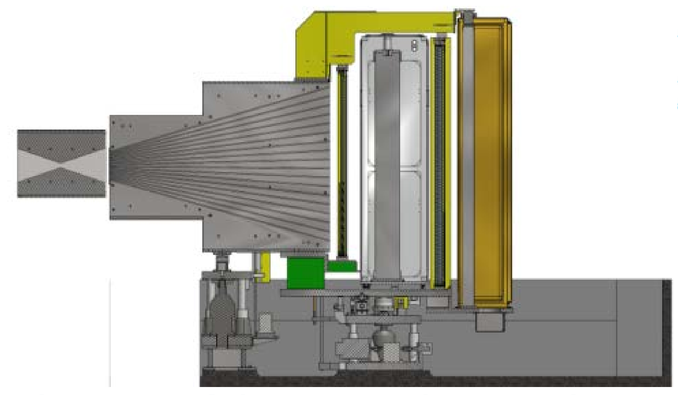

Schematic of the FMMS showing the hodoscope collimator, shield filters, detector cabinets, and electro-mechanical systems

The FMMS at TREAT showing the detector cabinet and source XY stage

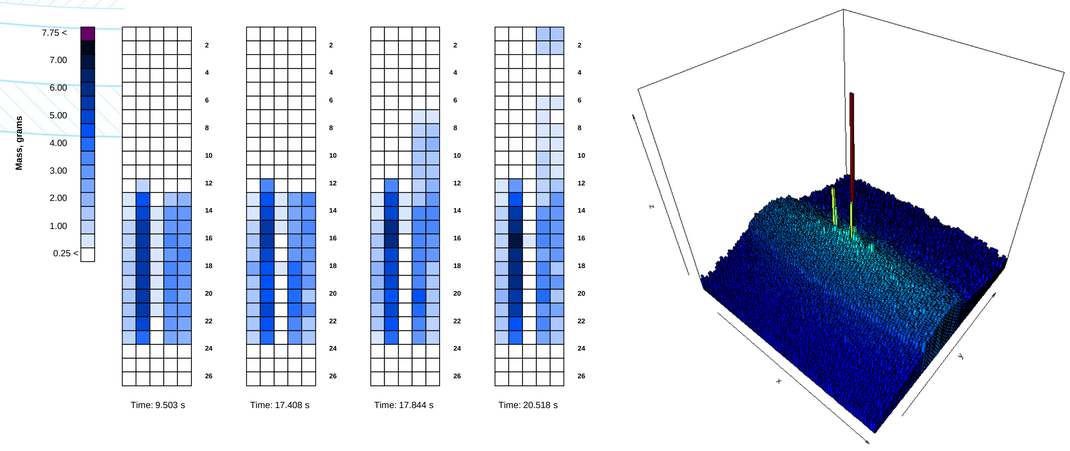

Example FMMS data from a historic fuel experiment (left) and MCNP-simulated response function, at the back face of the collimator, for a fuel pellet in the multi-SERTA test vehicle (right)

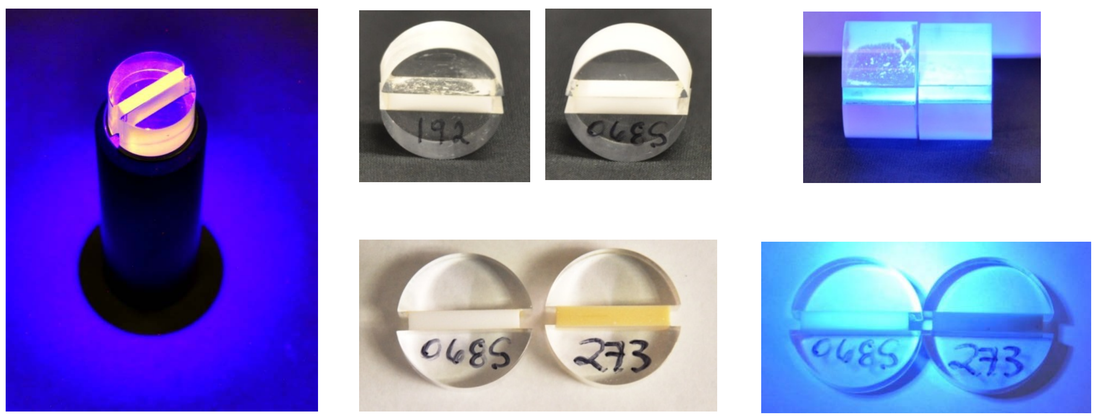

Photograph of a PRS button under UV-illumination (left) and photographs of suspect buttons (middle and right) illustrating delamination (top) and yellowing (bottom) failure modes

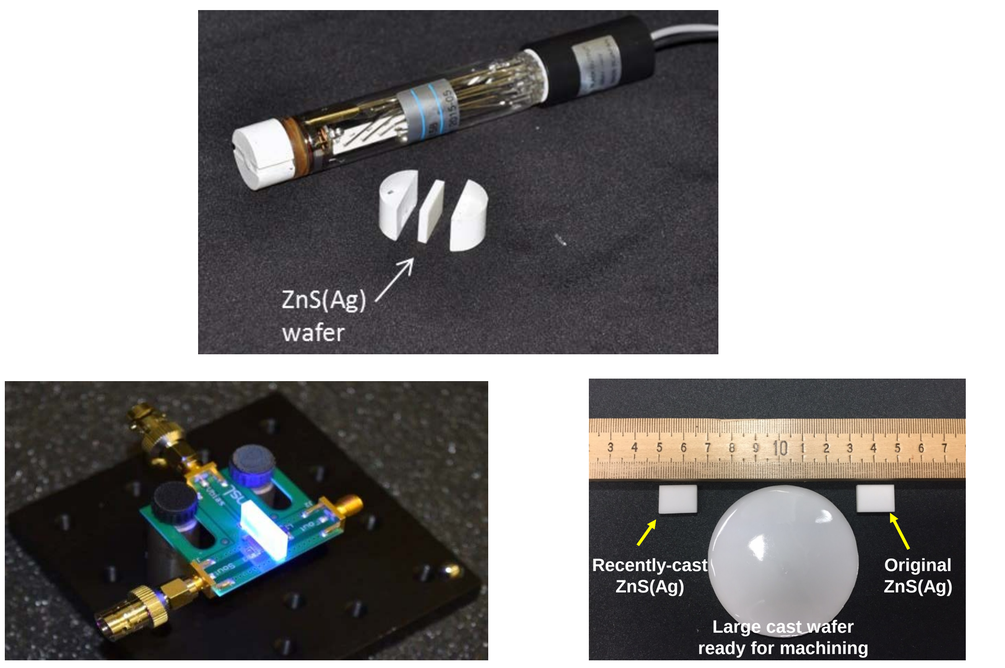

A PRS button attached to a PMT (top), a PRS wafer ready for evaluation with a silicon photomultiplier (SiPM, bottom left) and examples of experimental wafer materials being developed in our laboratory (bottom right)