DOE's Initial Approach for Large-Volume UO_2 Transport

Josh Jarrell and Elmar Eidelpes

GAIN/EPRI/NEI HALEU Webinar
April 29, 2020

www.inl.gov

Idaho National Laboratory

A large-volume, UO_2 HALEU transportation package concept

- Background and Goals
- HALEU composition and packaging selection
- Concept overview
- Feasibility evaluations
- Conclusions and path forward

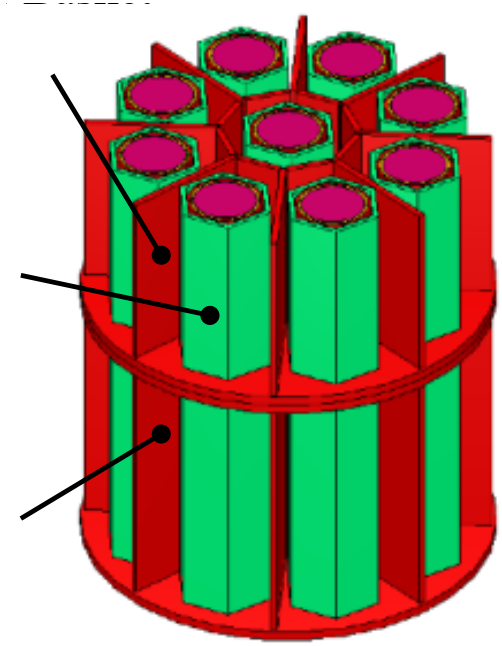

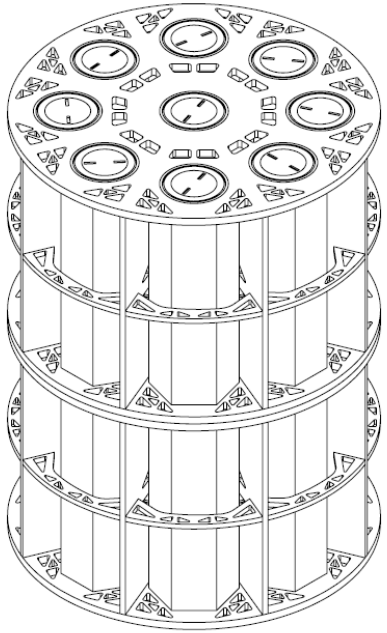

Background

- No large-volume packages for HALEU have been certified by NRC or DOE
  - Criticality appears to be the most pressing evaluation
  - Availability of criticality benchmark data had been identified as potential issue
- HALEU workshop 2018:
  - NEI/INL sponsored, participated by NRC, DOE, national lab complex, and Industry
  - NEI recommended development of a high-capacity transportation concept (≥ 1600 kg of UO_2 HALEU)
- DOE-NE initiated project shortly after NEI recommendation (INL, PNNL, and ORNL)
- Goals:
  - Definition of anticipated HALEU composition, including impurities
  - Investigate potential of existing package designs for HALEU transportation
  - Design a feasible HALEU transportation concept and demonstrate potential for licensing
  - Evaluate criticality benchmark data availability
  - Develop Functions and Requirements (F&Rs) for HALEU transportation concept

Beginning of 2020: Funding cut

HALEU Composition and Packaging Selection

- Two potential sources for timely HALEU production (recovery not enrichment)
  - Aluminum or zirconium-clad HEU fuels
  - **EBR-II ⇨ Assumed DOE HALEU feedstock for concept development**
    - Range of possible isotopic compositions (e.g., wt. % ^{233}U,)
    - Evaluated **pre-recast** compositions (significant margin in dose)
    - Type B package required for quantities greater than 3.4 kg (due to activity)
    - VERY Low heat generation ~5.33e-04 W/kg
- Evaluated current package candidates (RAMPAC Database)
  - TN Americas TN-LC
    - Heavy
    - Good Shielding
  - NAC International OPTIMUS™
    - OPTIMUS™-L/H
    - Lightweight
    - Multiple packages on a single legal-weight Truck (LWT)

Selected Candidate:

NAC International OPTIMUS™-L

Concept Overview

Existing Packaging	Novel Basket	Canister
	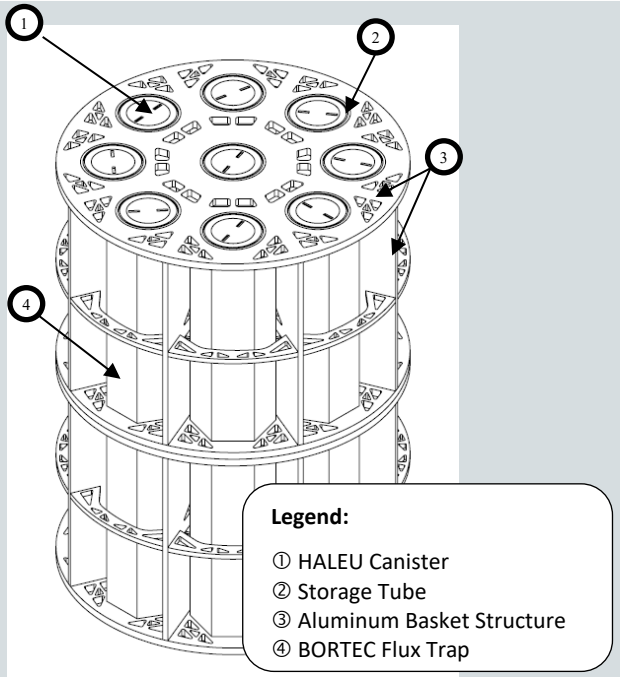	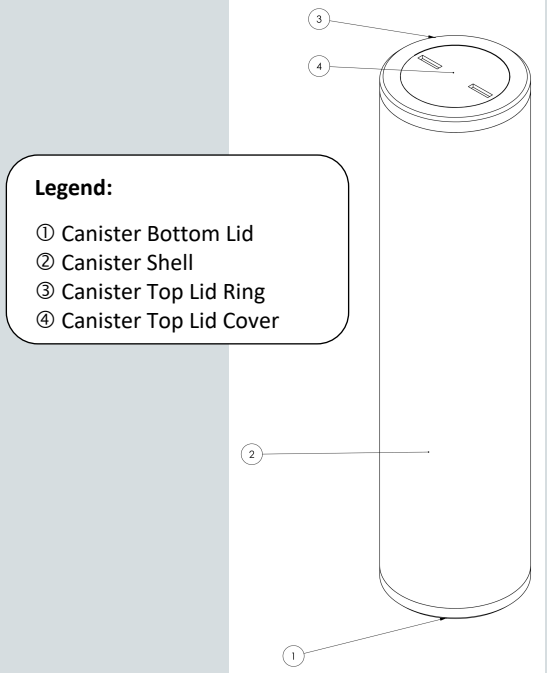
NAC OPTIMUS™-L (Five per LWT)	6061-T6 Aluminum and BORTEC™ flux traps	304L Stainless Steel (18 per package)

SCALE Model

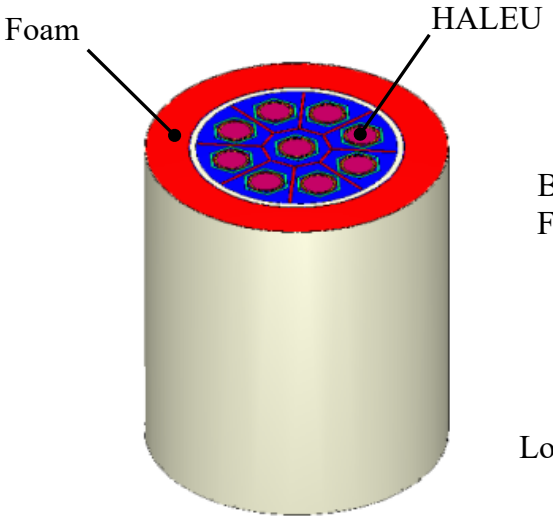

OP Cutaway

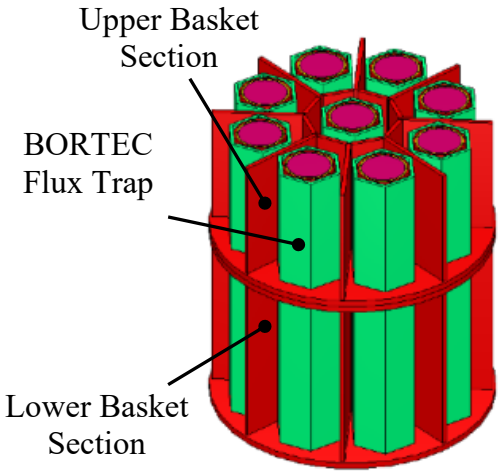

Basket with Canisters

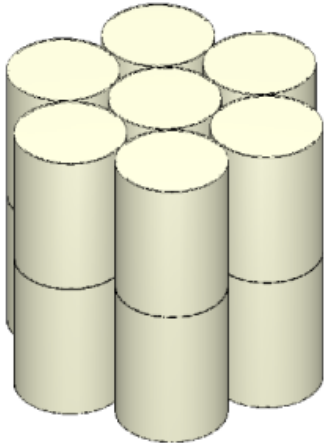

2 × 7 Package Array (No OP)

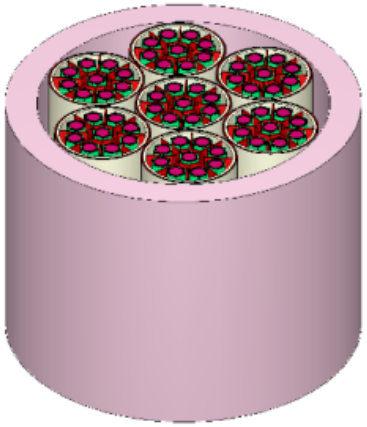

2 × 7 Array Cutaway with Water Reflector

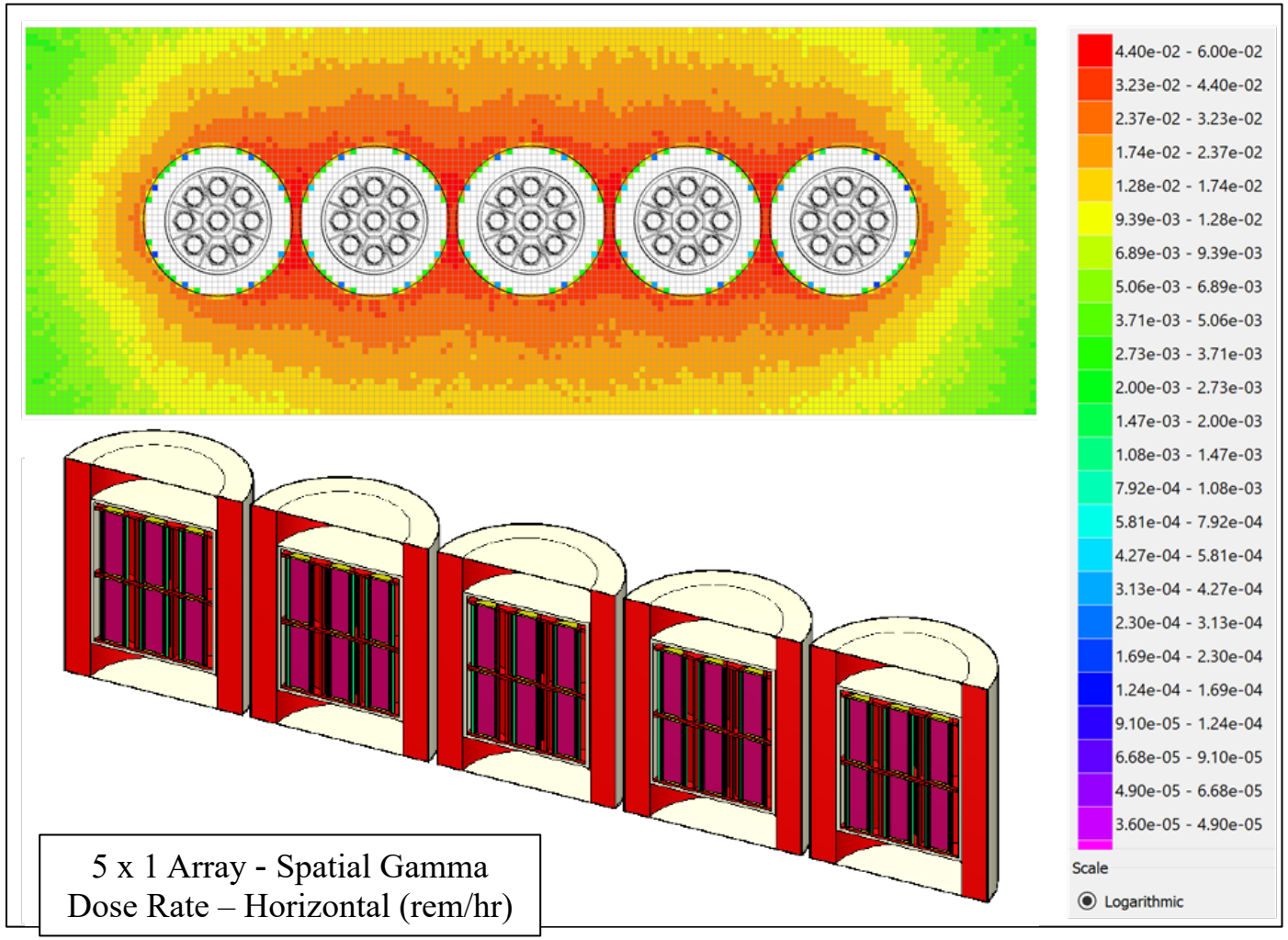

5 x 1 Array - Spatial Gamma Dose Rate – Horizontal (rem/hr)

Criticality Evaluations – Using SCALE CSAS6

- Novel flux trap design reduces reactivity in flooded CCV:
  - Pipes with hexagonal cross sections
  - 70% aluminum / 30% B_4C
- Worst case = Hypothetical accident condition (HAC)
  - k_{eff} = 0.917
  - 2 × 7 array of damaged packages, reflective boundary conditions (water/steel), dry space between packages and in packaging cavity, 15% UO_2 and 85% H_2O in canister

Regulation	Corresponding Package Configurations and Boundary Conditions
10 CFR 71.55	• Most reactive, credible package configuration, and • Most reactive credible water moderation, and • Close full reflection by water or surrounding packaging material.
10 CFR 71.59	• 5 × N undamaged packages with nothing in-between, or • 2 × N packages damaged by HAC remain subcritical and optimum interspersed hydrogenous moderation. <u>Further:</u> • Close full reflection by water of the 5 × N or 2 × N array, and • N ≥ 0.5, and • ∑CSI ≤ 50.

BORTEC™ Flux Trap Design

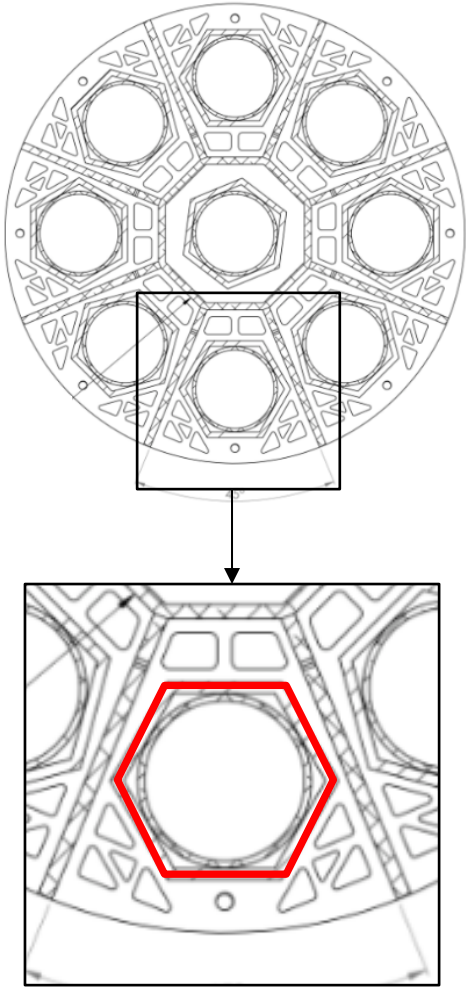

Applicable Criticality Benchmarks – using SCALE TSUNAMI

- Most reactive NCT and HAC package configuration
- International Criticality Safety Benchmark Evaluation Project (ICSBEP) and ORNL's VALID library data
- Total: 1584 available benchmarks
- NCT model – $k_{eff} \approx 0.8$:
  - $c_k \geq 0.9$ for 34 benchmarks (similar)
  - $c_k \geq 0.8$ for 566 benchmarks (marginally similar)
- HAC model – $k_{eff} \approx 0.92$:
  - $c_k \geq 0.9$ for 55 benchmarks (similar)
  - $c_k \geq 0.8$ for 1104 benchmarks (marginally similar)

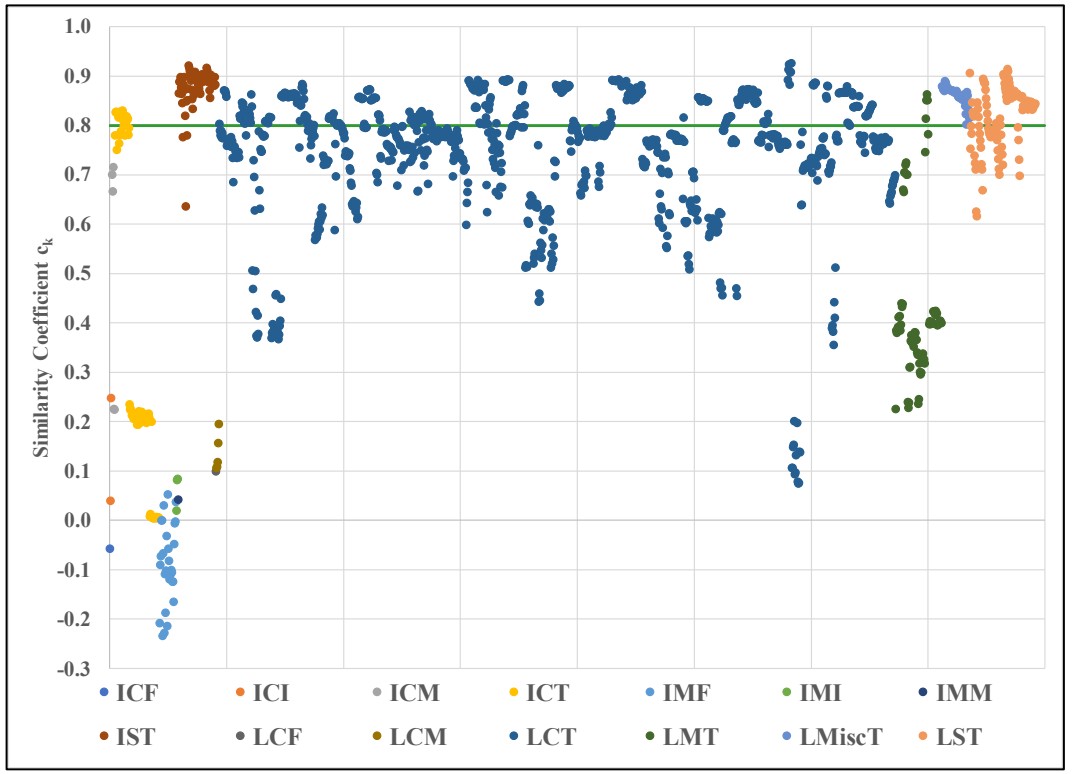

NCT Model

Dose Evaluations – using SCALE MAVERIC

- Dose rates (mrem/hr)

Undamaged Single Package, Maximum HALEU Composition	
Surface	30 (limit 200)
1 m from surface	6 (limit 10)
Damaged Single Package, Maximum HALEU Composition	
Surface	101
1 m from surface	12 (limit 1000)
Transportation Array, Maximum HALEU Composition	
Surface	60
1 m from surface	17 (limit 50)

- Nonexclusive use conveyance possible
  - Common carrier and open transport
- Actual doses expected to be lower

Regulation	Corresponding Dose Rate Limits
10 CFR 71.47	• Dose rate ≤ 2 mSv/hr (200 mrem/hr) at any point on the external surface of the package, and, • Transport index (TI) ≤ 10, which is a limit equivalent to 0.1 mSv/hr (10 mrem/hr) at 1 m from the external surface of the package.
10 CFR 71.51	• HAC dose rate ≤ 10 mSv/hr (1 rem/hr) at 1 m from the external surface of the package.
49 CFR 177.842	• ∑TI ≤ 50.

Non-nuclear evaluations

Finite Element (FE) Simulations (LS-DYNA)

- Evaluation of cask containment vessel (CCV) internals only (basket and canister)
- NCT and HAC package drops
- Negligible plastic strains (<2% under NCT, and <4% under HAC) in basket and canister structure

Confinement

- Confinement barrier is CCV of OPTIMUS™-L
- UO_2 confinement in canister for operational safety with two O-rings at threated lid
- Negligible plastic strains in canister lid for HAC drops

Thermal Evaluations

- Critical component is O-ring of OPTIMUS™-L CCV (evaluated for license application)

Operations

- A variety of different package loading operations procedures possible

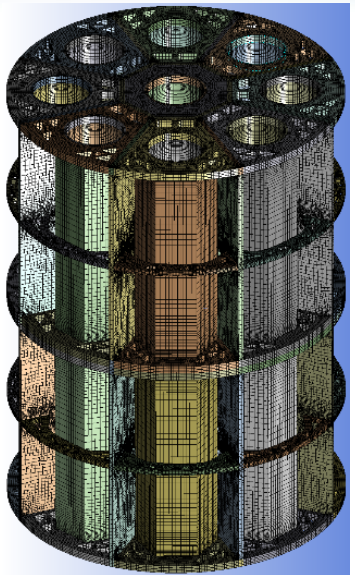

FE Model - Basket

Conclusions

- **Payload**:
  - Assumption: UO_2 powder density of 3 g/cm^3 – Typically between 2 and 4 g/cm^3
  - 21 kg of HALEU per canister – 18 canisters per package
  - 376 kg of HALEU per package – Five packages per LWT
  - **1,881 kg of HALEU per LWT**
- **Nonexclusive use** conveyance configuration possible
- Sufficient **criticality benchmarks available**
- **Criticality safety** given – Flux trap design works
- Sufficient **shielding** provided
- **Structural integrity** achievable
- **Confinement** evaluated
- **Thermal** evaluations promising
- Safe **package operations** possible
- Potential to meet **regulatory framework** demonstrated

Next Steps

- Authoring of **two journal paper manuscripts** in progress:
  - E. Eidelpes et al. “A High-Assay Low-Enriched Uranium Fuel Transportation Concept”
  - R. Hall et al. “Assessment of Critical Experiment Benchmark Applicability to a Large Capacity HALEU Transportation Package Concept”

- The design of the presented concept shows significant potential to be used as a **basis for the development of a licensable package design**.
- The know-how gained during this project could be used to **develop F&Rs** for a HALEU transportation concept.

Questions?

References

- NAC International, “Introducing OPTIMUS™-H and OPTIMUS™-L OPTImal Modular Universal Shipping Cask” https://www.nacintl.com/images/pdf/NAC_OPTIMUS_2018.pdf (current as of April 17, 2020).
- NAC International, “OPTIMUS™ Transport Packages” https://www.nacintl.com/images/pdf/NAC-Product%20Flyer-Optimus-Transformer-101619.pdf (current as of April 17, 2020).
- S. SISLEY, J. ENGLAND, J. SUBIRY, “NAC’s OPTIMUS™ PACKAGING for Research and Test Reactor Fuels and Wastes,” *Proc. Int. Mtg. on Reduced Enrichment for Research and Test Reactors,* Zagreb, Croatia, October 6-9, 2019.
- U. S. DOE, “Radioactive Material Packaging Database” https://rampac.energy.gov/ (current as of April 17, 2020).
- D. VADEN, “Isotopic Characterization of HALEU from EBR-II Drive Fuel Processing,” INL/EXT-18- 51906, Rev. 0, INL (Nov. 2018).
- J. JARRELL, “A Proposed Path Forward for Transportation of High-Assay Low-Enriched Uranium,” INL/EXT-18-51518, Rev. 0, INL (Sept. 2018).
- M. TSCHILTZ, “Addressing the Challenges with Establishing the Infrastructure for the Front-end of the Fuel Cycle for Advanced Reactors,” NEI, Washington D. C., January, 2018.
- CERADYNE CANADA, “Neutron Absorber Materials for Fresh and Spent Fuel Applications”.
- L. WANG, “Evaluation of Aluminum-Boron Carbide Neutron Absorbing Materials for Interim Storage of Used Nuclear Fuel,” NEUP 10-603, University of Michigan (Dec. 2015).
- J. C. CLAYTON and S. ARONSON, “Some Preparation Methods and Physical Characteristics of UO_2 Powders,” WAPD-178, Bettis Plant (Dec. 1958).